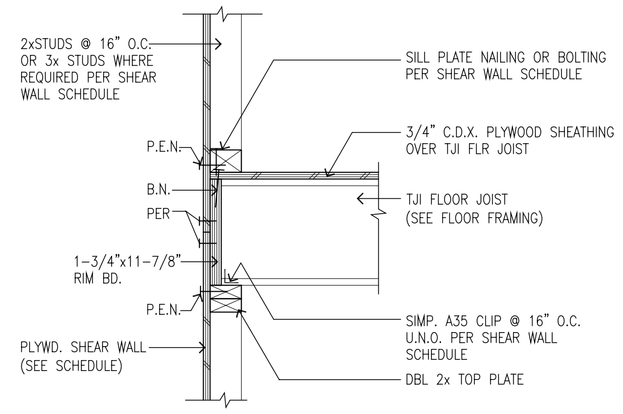

17 EXT. SHEAR WALL (PERPENDICULAR)
SCALE: 1"=1'-0" DT-EXT. 1

FOR ALIGNMENT CONTROL BETWEEN A ROOF TRUSS AND NONBEARING WALLS; THE 1-1/2" SLOT PERMITS VERTICAL TRUSS CHORD MOVEMENT WHEN LOADS ARE APPLIED

MATERIAL: 18 GAUGE
FINISH: GALVANIZED
INSTALLATION:
1. USE ALL SPECIFIED FASTENERS: SEE GENERAL NOTES.
2. USE STC OR DTC DEPENDING ON REQUIRED LOADS. STC, INSTALLED WITH DRYWALL STOP (DS), HELPS PREVENT FASTENERS TEARING THROUGH THE CEILING SHEETROCK (SEE ILLUSTRATION).
3. USE STCT WHERE TRUSS OR RAFTER IS SEPARATED FROM THE TOP PLATE OF THE NONBEARING WALL.
4. INSTALL SLOT NAILS IN THE MIDDLE OF THE SLOT.

MODEL NO.	DIMENSIONS		FASTENERS	ALLOWABLE LOADS[1] (133&160)			
	PLATE BASE	VERTICAL LEG	BASE	WITHOUT GAP[2]		WITH 1/4" GAP[3]	
				F_1	F_2	F_1	F_2
STC	1-1/4" x 1-7/8"	1-1/4" x 2-3/4"	2-8d	85	50	35	35
STCT	1-1/4" x 1-3/4"	1-1/4" x 4-1/4"	2-8d	–	–	–	–
DTC	2-1/2" x 1-7/8"	2-1/2" x 2-3/4"	4-8d	125	210	85	135

1. LOADS MAY NOT BE INCREASED FOR SHORT-TERM LOADING.
2. TRUSS OR RAFTER MUST BE BEARING ON TOP PLATE TO ACHIEVE THE ALLOWABLE LOADS UNDER "WITHOUT GAP".
3. INSTALLED WITH MAXIMUM 1/4" SPACE BETWEEN RAFTER OR TRUSS AND TOP PLATE UNDER "WITH 1/4" GAP". WHERE LOADS ARE NOT REQUIRED, SPACE IS NOT LIMITED TO 1/4".

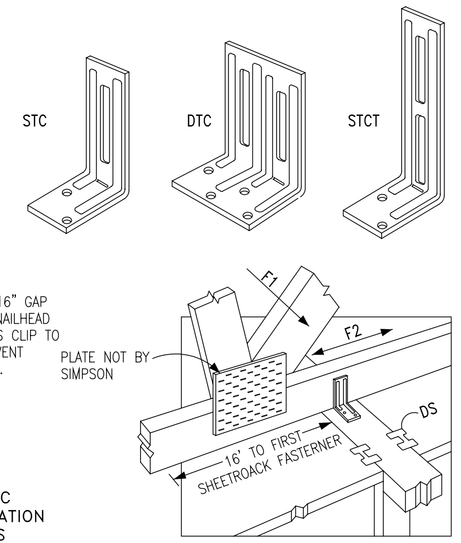

14 STC/STCT/DTC ROOF TRUSS CLIPS
SCALE: N.T.S. DT-CHU52

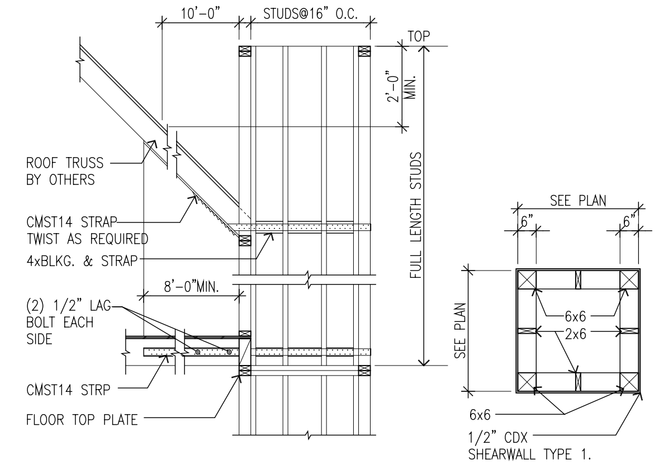

9 FIREPLACE DETAIL
SCALE: 3/8"=1'-0" DT-OAK02

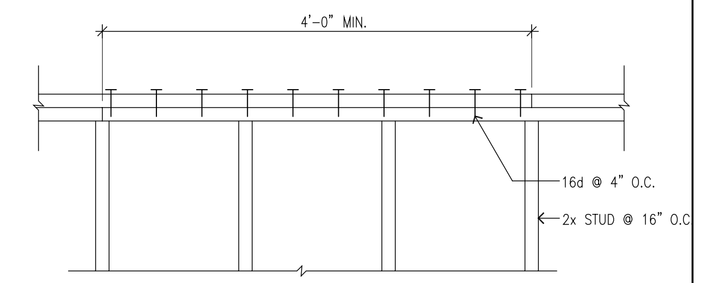

5 CONNECTION @ SPLICES OF DOUBLE PLATE
SCALE: 1/4"=1'-0" DT-CHU68

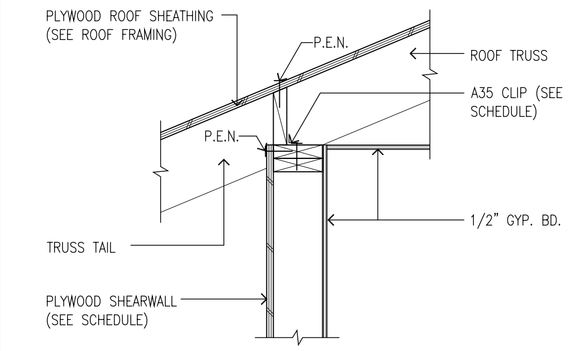

1 SHEAR TRANSFER @ EAVE
SCALE: 1"=1'-0" DT-CHU18

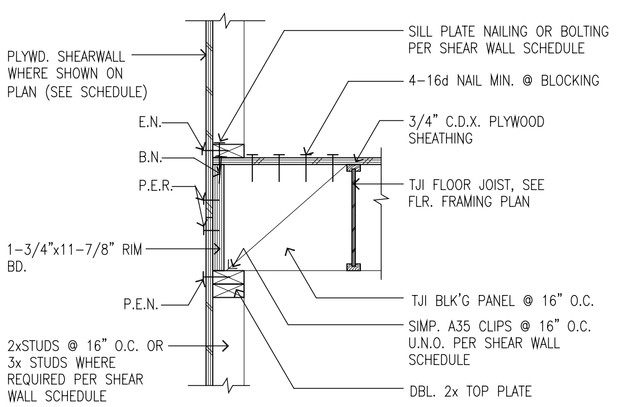

18 EXT. SHEAR WALL (PARALLEL)
SCALE: 1"=1'-0" DT-EXT. 2

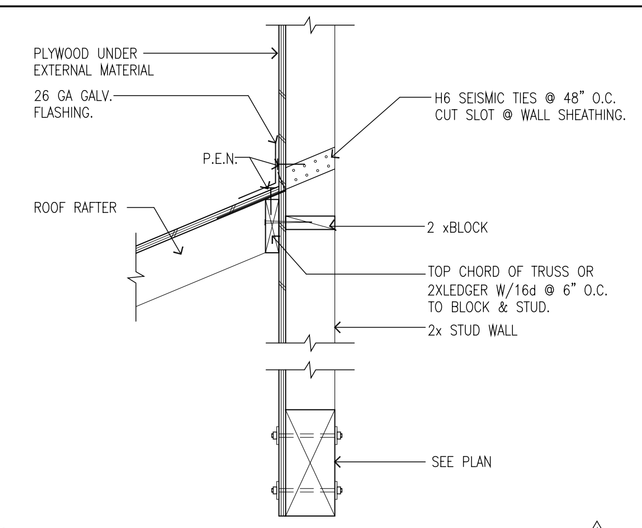

10 LOW ROOF PERPENDICULAR TO WALL
SCALE: 1"=1'-0" DT-CHU15

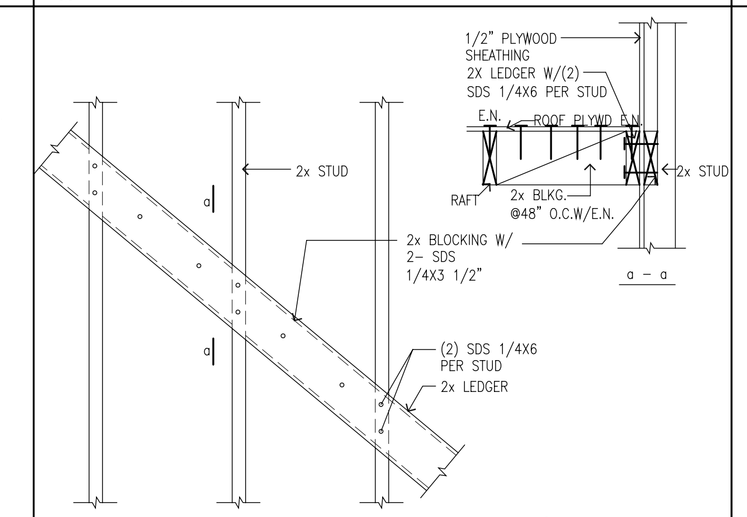

6 CONNECTION BTW STUD & RAFT/TOP CHORD @ PARALLEL TO SHEAR WALL
SCALE: 1"=1'-0" DT-CHU76

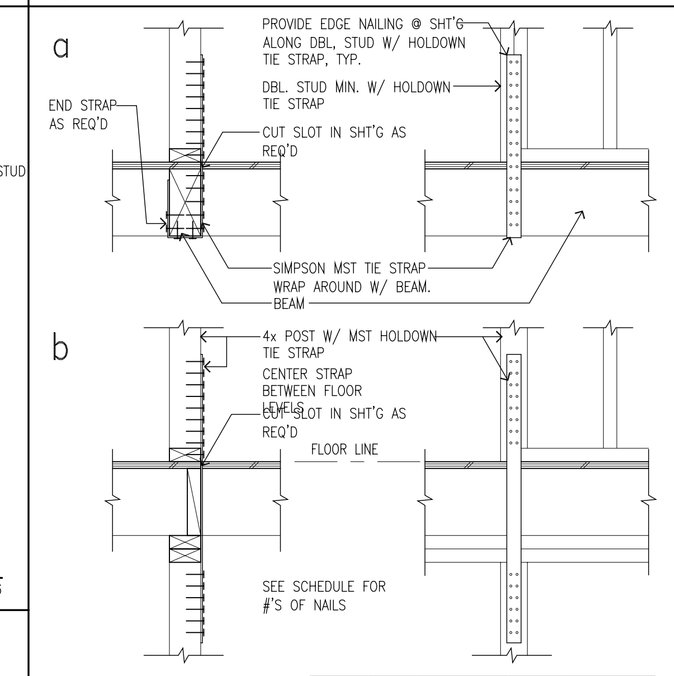

FLOOR TO FLOOR CLEAR SPAN TABLE

MODEL NO.	CLEAR SPAN	FASTENERS (TOTAL)	ALLOWABLE LOAD (133)	ALLOWABLE LOAD (160)
MST37	18	20-16d	2095	2510
	16	22-16d	2305	2765
MST48	18	32-16d	3370	3695
	16	34-16d	3580	3695
MST60	18	46-16d	4830	4830
	16	48-16d	4830	4830
MST72	18	46-16d	4830	4830
	16	48-16d	4830	4830
MST136	18	14-10dx1-1/2	1270	1525
	16	16-10dx1-1/2	1450	1740
MST148	18	26-10dx1-1/2	2355	2830
	16	28-10dx1-1/2	2540	3045
MST160	18	38-10dx1-1/2	3445	4135
	16	40-10dx1-1/2	3625	4350
MST172	18	50-10dx1-1/2	4535	5080
	16	52-10dx1-1/2	4715	5080

NOTE:
EQUAL NUMBER OF NAILS ON EITHER SIDE OF JOINT BEING STRAPPED.

MODEL NO.	GA.	DIMENSIONS W	DIMENSIONS L	FASTENERS (TOTAL) NAILS	BOLTS QTY.	BOLTS DIA.	ALLOWABLE LOADS NAILS FLOOR (100)	NAILS MAX (133)	NAILS MAX (160)	BOLTS FLOOR (100)	BOLTS MAX (133)	BOLTS MAX (160)
MST27	12	2-1/16	27	30-16d	4	1/2	2360	3140	3770	1353	1800	2165
MST37		2-1/16	37-1/2	42-16d	6	1/2	3304	4395	5080	1898	2525	3025
MST48		2-1/16	48	46-16d	8	1/2	3642	4845	5310	2305	3065	3575
MST60	10	2-1/16	60	56-16d	10	1/2	4827	6420	6760	2812	3740	4485
MST72		2-1/16	72	56-16d	10	1/2	4827	6420	6760	2812	3740	4485

NOTE:
EQUAL NUMBER OF NAILS ON EITHER SIDE OF JOINT BEING STRAPPED.

3 HOLDOWN TIE STRAP DETAIL
SCALE: 1"=1'-0" DT-CHU41

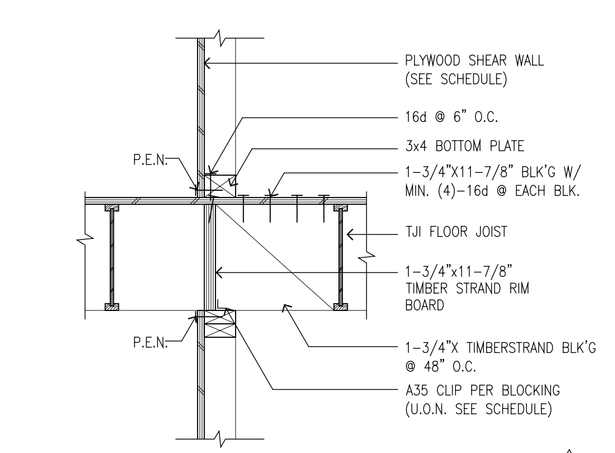

20 INT. SHEAR WALL (PARALLEL)
SCALE: 1"=1'-0" DT-INT 2

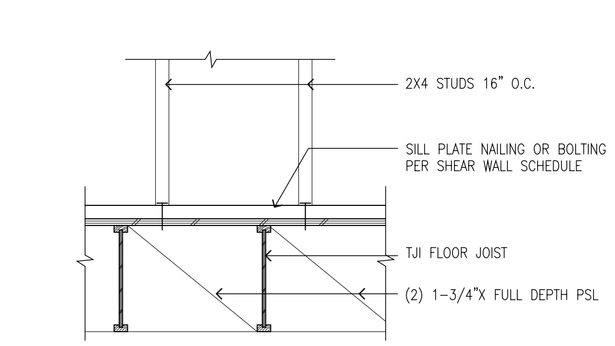

19 INT. WALL @ SECOND FLOOR (JST ⊥ WALL)
SCALE: 1"=1'-0" DT-INT. 3

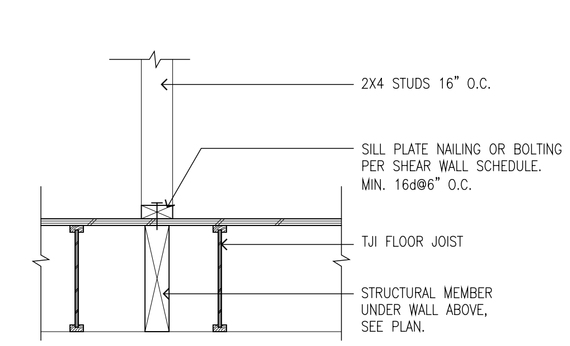

15 INT. WALL @ SECOND FLOOR (JST ∥ WALL)
SCALE: 1"=1'-0" DT-INT. 1

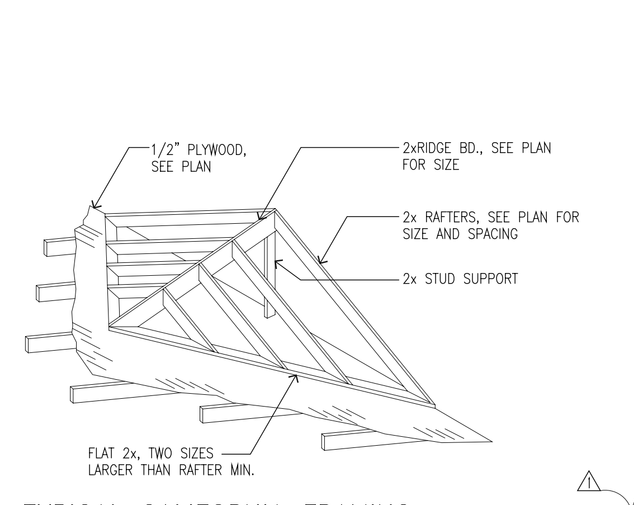

11 TYPICAL CALIFORNIA FRAMING
SCALE: 1"=1'-0" DT-RW16

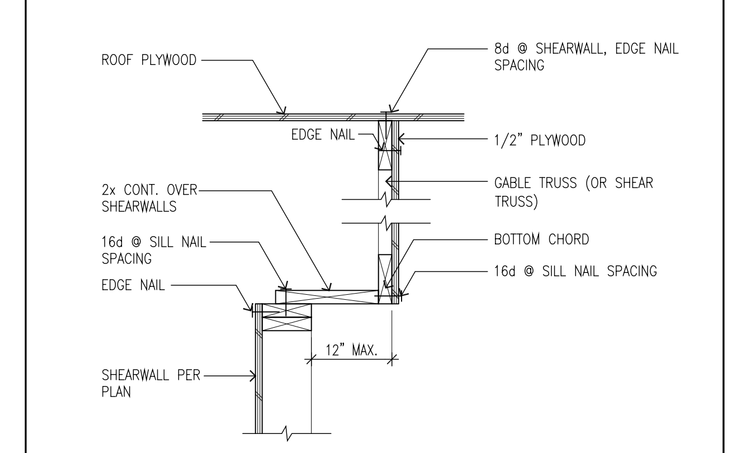

7 SHEAR TRANSFER @ OFFSET SHEAR TRUSS
SCALE: 1"=1'-0" DT-CHU26

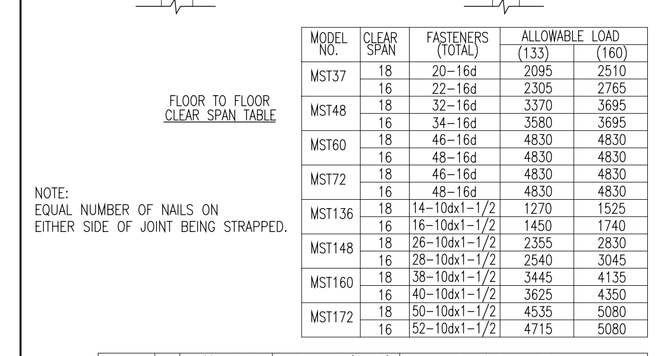

4 COLLECTOR
SCALE: 1"=1'-0" DT-CHU42

16 DECK GUARDRAIL
SCALE: 1-1/2"=1'-0" DT-GR

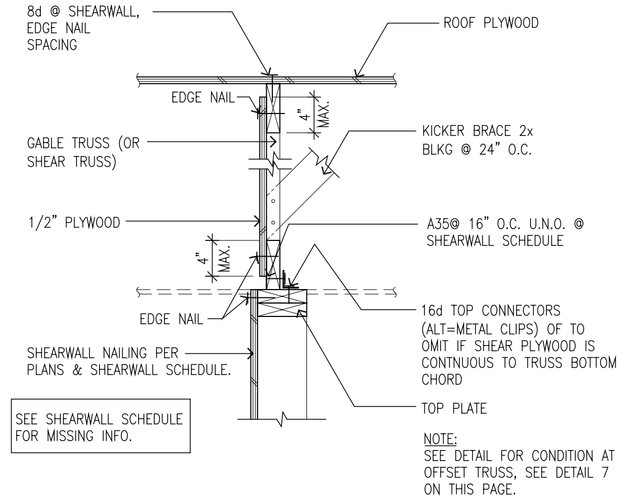

12 SHEAR TRANSFER (PARALLEL COND.)
SCALE: 1"=1'-0" DT-CHU23

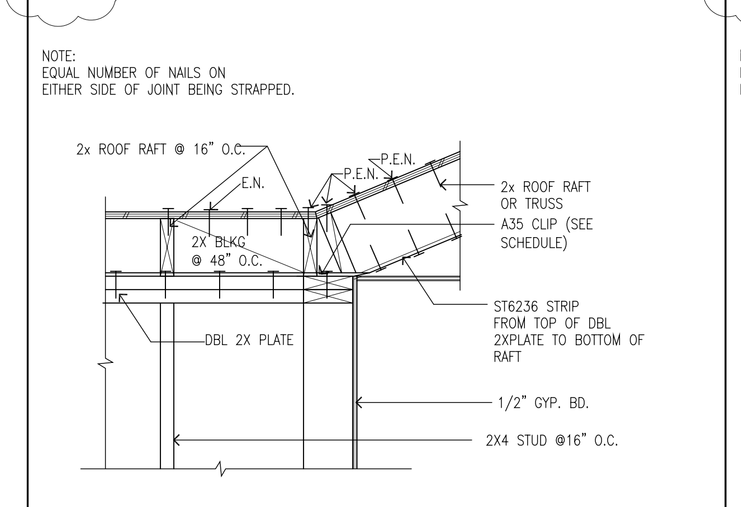

8 SHEAR TRANSFER @ EAVE
SCALE: 1"=1'-0" DT-CHU18A

REVISIONS	BY
PLAN CHECK COMMENTS 09/08/06 1	HW
PLAN CHECK COMMENTS 10/03/06 2	HW

CHU DESIGN & ENGR., INC.
39 W. 43rd AVENUE
SAN MATEO, CALIFORNIA 94403
TEL: (650) 345-9286
FAX: (650) 345-9287

The drawing on this sheet, specification ideas, designs, and arrangements represented thereby are and shall remain the property of CHU DESIGN AND ENGINEERING, INC.; and in no part thereof shall be copied, disclosed to others or used in connection with any work or project other than the specified project for which they have been prepared and developed without the written consent of CHU DESIGN AND ENGINEERING, INC. Visual contact with these plans or specifications shall constitute conclusive evidence of acceptance to these restrictions.

REGISTERED PROFESSIONAL ENGINEER TSAI SHYI CHU NO. C-29056 Exp. 3-31-07 CIVIL STATE OF CALIFORNIA

NEW RESIDENCE
835 WESTRIDGE DRIVE,
PORTOLA VALLEY, CA

DATE: JULY, 2006
SCALE: AS NOTED
DRAWN: HW
JOB: 835-PV
SHEET NO.
D.3
OF SHEETS